mm [inch]

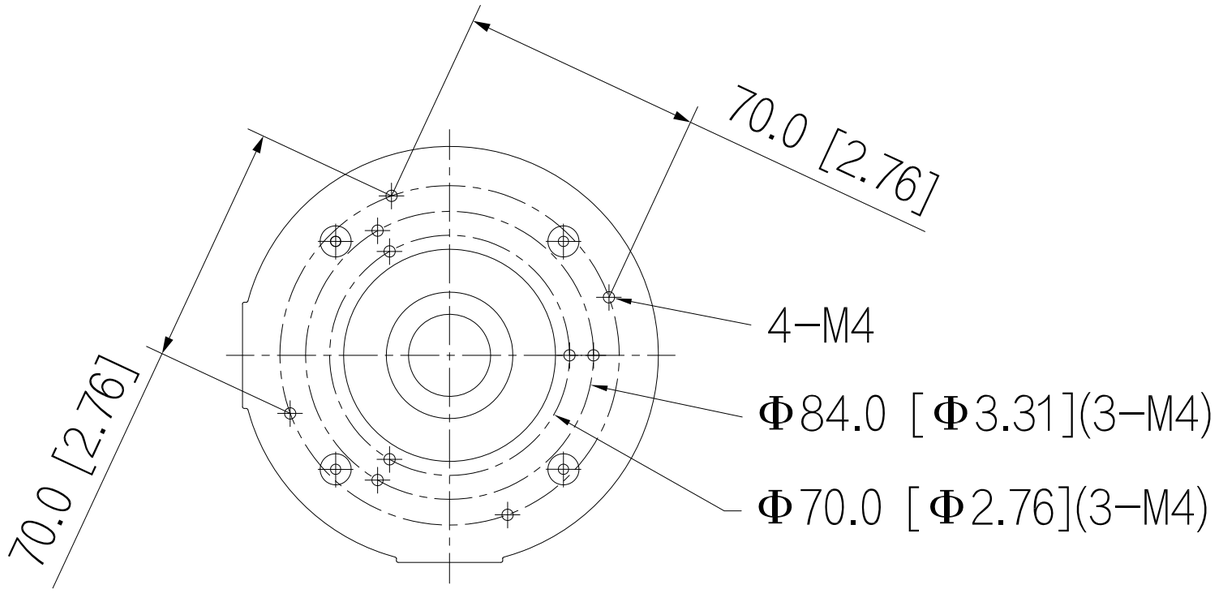
70.0 [2.76]
70.0 [2.76]
4−M4
Φ84.0 [Φ3.31](3−M4)
Φ70.0 [Φ2.76](3−M4)

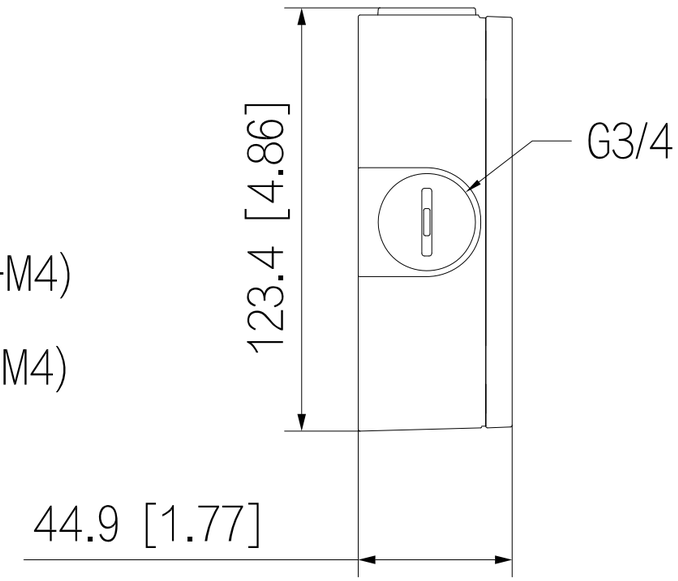
123.4 [4.86]
G3/4
44.9 [1.77]

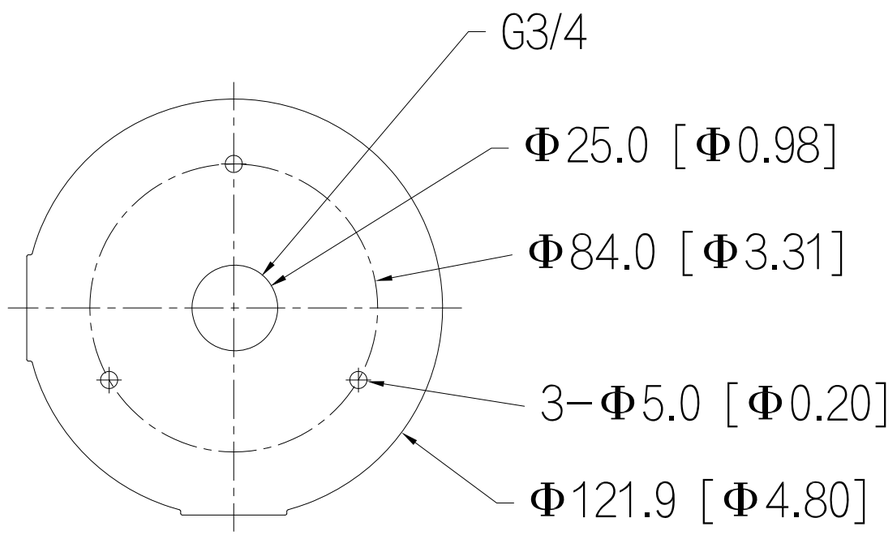
G3/4
Φ25.0 [Φ0.98]
Φ84.0 [Φ3.31]
3−Φ5.0 [Φ0.20]
Φ121.9 [Φ4.80]

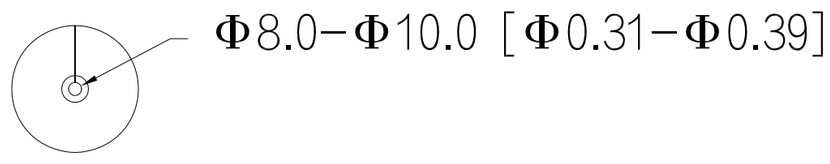
Φ8.0−Φ10.0 [Φ0.31−Φ0.39]